A

AQA

Surname _____

Forename(s) _____

Centre Number _____

Candidate Number _____

Candidate Signature _____

I declare this is my own work.

GCSE
COMBINED SCIENCE: SYNERGY

H

Higher Tier Paper 3 Physical Sciences

8465/3H

Friday 9 June 2023 Afternoon

Time allowed: 1 hour 45 minutes

At the top of the page, write your surname and forename(s), your centre number, your candidate number and add your signature.

[Turn over]

JUN2384653H01

MATERIALS

For this paper you must have:

- **a ruler**
- **a protractor**
- **a scientific calculator**
- **the periodic table (enclosed)**
- **the Physics Equations Sheet (enclosed).**

INSTRUCTIONS

- **Use black ink or black ball-point pen.**
- **Pencil should only be used for drawing.**
- **Answer ALL questions in the spaces provided. Do not write on blank pages.**
- **If you need extra space for your answer(s), use the lined pages at the end of this book. Write the question number against your answer(s).**
- **Do all rough work in this book. Cross through any work you do not want to be marked.**
- **In all calculations, show clearly how you work out your answer.**

INFORMATION

- **The maximum mark for this paper is 100.**
- **The marks for questions are shown in brackets.**
- **You are expected to use a calculator where appropriate.**
- **You are reminded of the need for good English and clear presentation in your answers.**

DO NOT TURN OVER UNTIL TOLD TO DO SO

0 1

This question is about metals.

FIGURE 1 represents the electronic structure of an atom.

FIGURE 1

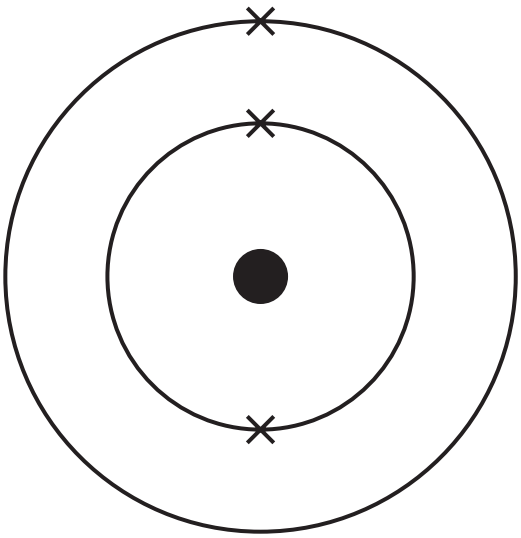

0 1 . 1

Identify the metal represented in FIGURE 1.

Use the periodic table. [1 mark]

_____

_____

0 1 . 2

How does the atom in FIGURE 1 form a positive ion?
[1 mark]

_____

_____

Copper is too soft for some uses.

Copper can be mixed with other metals to make a mixture that is harder than copper.

0 1 . 3

Name the type of mixture formed when copper is mixed with other metals. [1 mark]

_____

_____

[Turn over]

0 1 . 4

FIGURE 2 shows the percentage (%) by mass of three metals in a mixture.

FIGURE 2

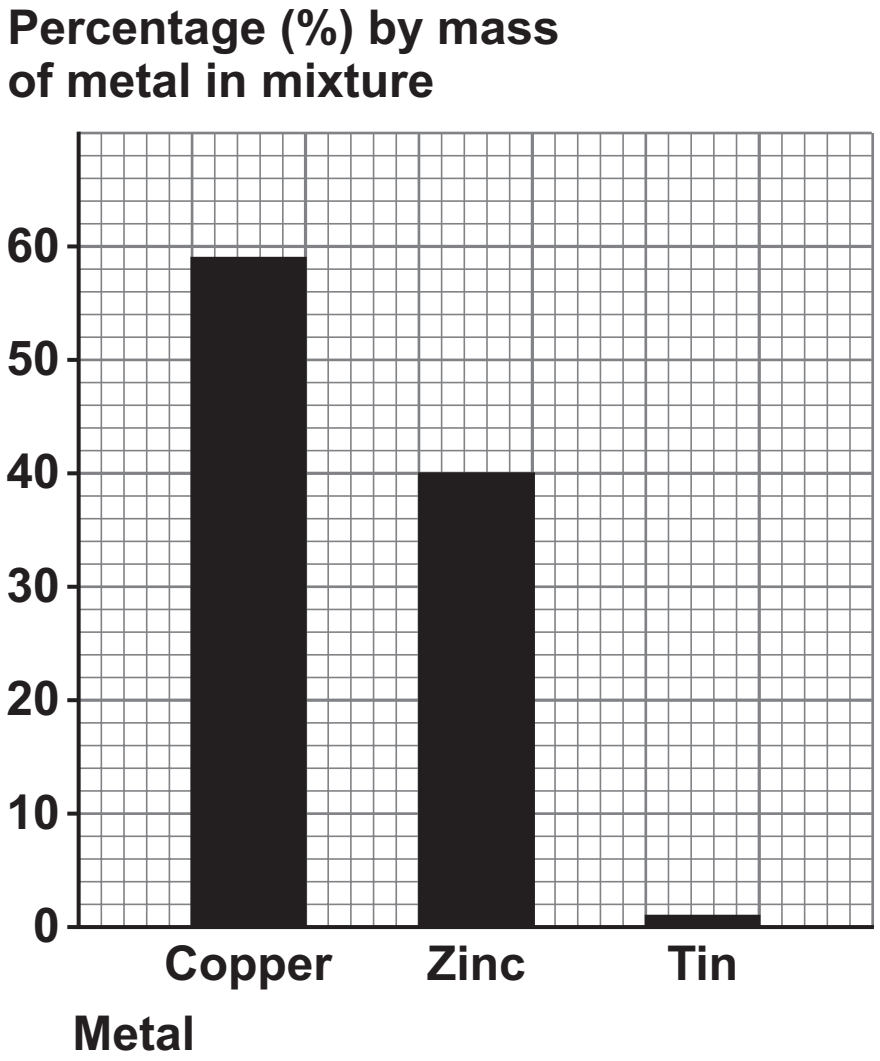

Determine the mass of copper in 20 g of the mixture.
[3 marks]

_____

_____

_____

_____

_____

_____

Mass of copper = _____ **g**

[Turn over]

FIGURE 3 represents pure copper and a mixture of copper and metal X.

FIGURE 3

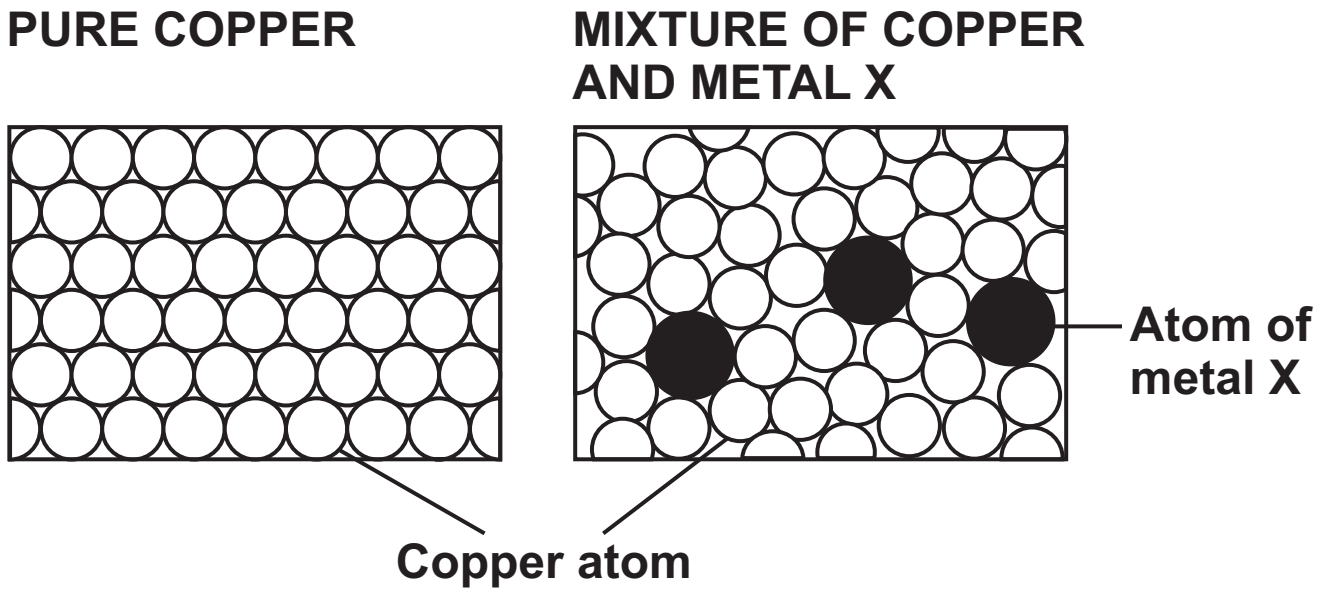

0 1 . 5

Explain why the mixture of copper and metal X is harder than pure copper. [3 marks]

[Turn over]

0 1 . 6

Give TWO reasons why copper has a high melting point. [2 marks]

1 _____

_____

_____

2 _____

_____

_____

0 1 . 7

Why is copper a good conductor of electricity? [1 mark]

_____

_____

_____

12

BLANK PAGE

[Turn over]

0 2

FIGURE 4 shows part of a roller coaster ride in a theme park.

The roller coaster carriages move along the track from position A to position C.

FIGURE 4

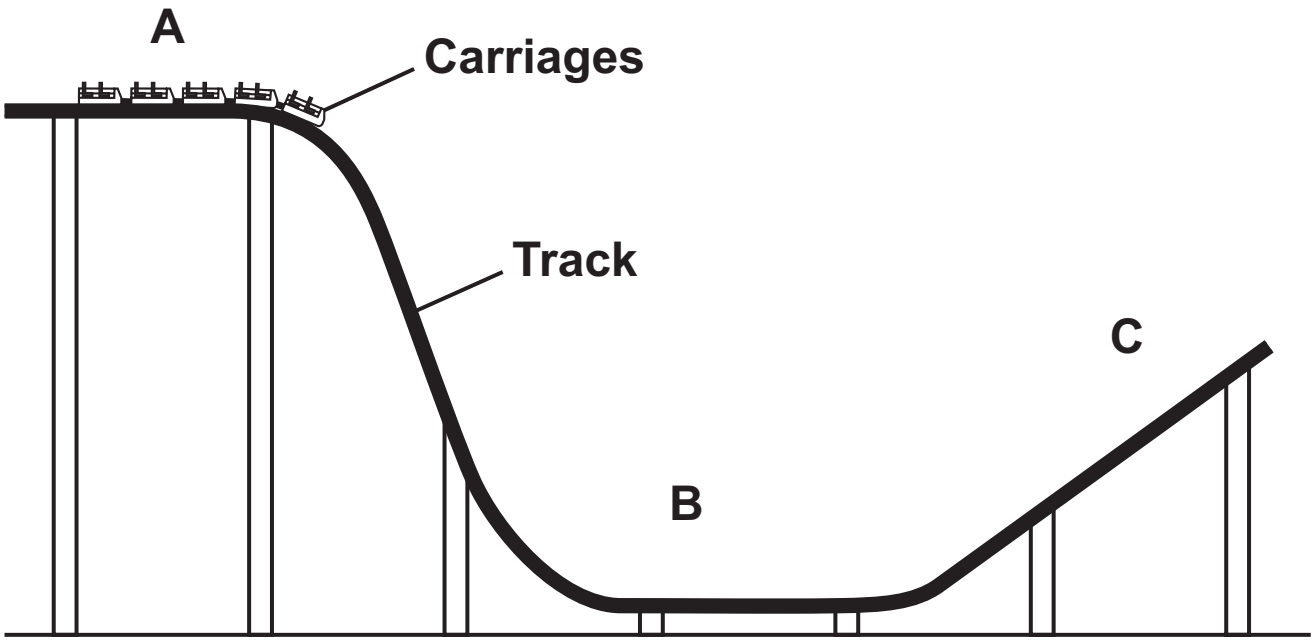

Use the Physics Equations Sheet to answer Questions 02.1 and 02.2.

0 2 . 1

Which equation links kinetic energy (E_k), mass (m) and speed (v)? [1 mark]

Tick (✓) ONE box.

☐ $E_k = mv^2$

☐ $E_k = \frac{1}{2}mv$

☐ $E_k = \frac{1}{2}mv^2$

☐ $E_k = \frac{1}{2}m^2v$

[Turn over]

0 2 . 2

FIGURE 5 shows how the speed of the carriages changed as the carriages moved along the track from position A to position B.

FIGURE 5

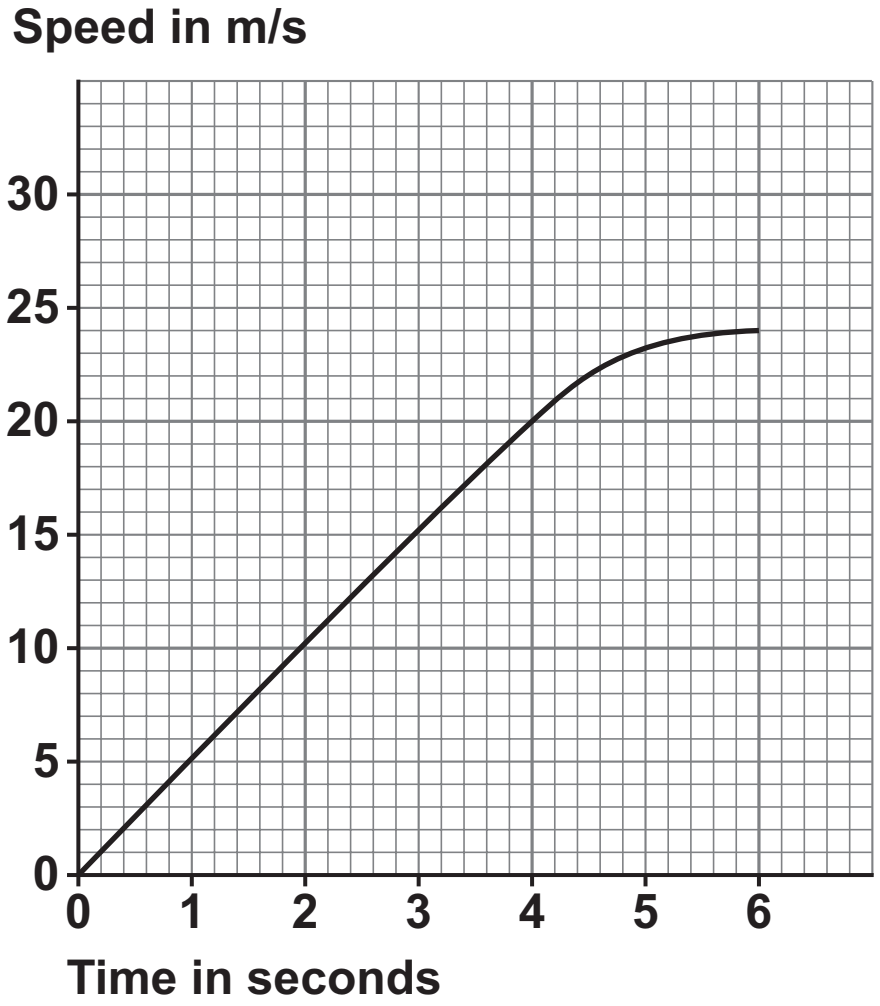

The kinetic energy of the carriages at 6.0 seconds was 900 000 J.

Calculate the mass of the carriages.

Use FIGURE 5, on the opposite page. [4 marks]

_____

_____

_____

_____

_____

_____

_____

_____

Mass = _____ **kg**

[Turn over]

FIGURE 6 shows the carriages at position B on the track.

FIGURE 6

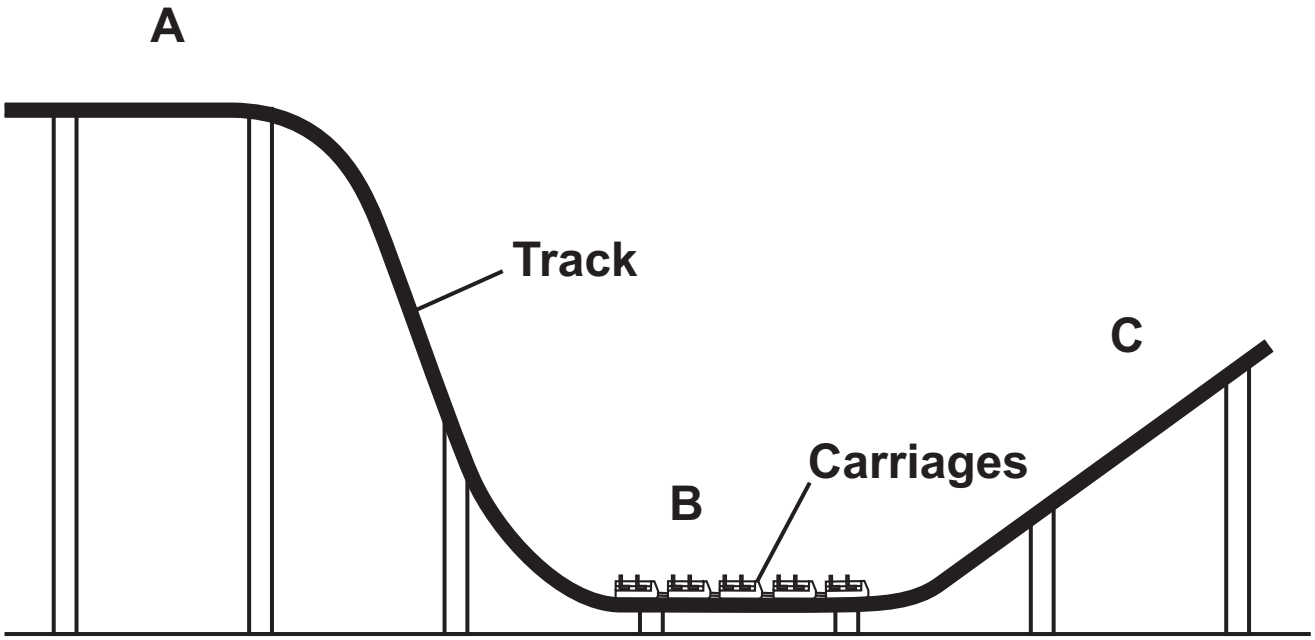

0 2 . 3

Why does the speed of the carriages decrease as they move along the track from position B to position C?
[1 mark]

Tick (✓) ONE box.

- [ ] **Gravitational potential energy is transferred to kinetic energy.**
- [ ] **Kinetic energy is transferred to gravitational potential energy.**
- [ ] **Thermal energy is transferred from the surroundings to the carriages.**

[Turn over]

Brakes are used to stop the carriages at the end of the ride.

0 2 . 4

Explain why water on the brakes affects the distance the carriages travel after the brakes are applied. [2 marks]

0 2 . 5

The brakes are made of a material with a high thermal conductivity.

Explain what is meant by 'high thermal conductivity'.
[2 marks]

_____

_____

_____

_____

_____

_____

10

[Turn over]

0 3

Copper carbonate reacts with hydrochloric acid to produce copper chloride and two other products.

0 3 . 1

Name the TWO other products formed when copper carbonate reacts with hydrochloric acid.

Do NOT refer to copper chloride. [2 marks]

1 _____

_____

2 _____

_____

0 3 . 2

Describe a method to make pure, dry crystals of copper chloride from copper carbonate and hydrochloric acid. [6 marks]

_____

_____

_____

_____

_____

8

[Turn over]

0 4

FIGURE 7 shows how the potential difference of the mains electricity supply varies with time.

FIGURE 7

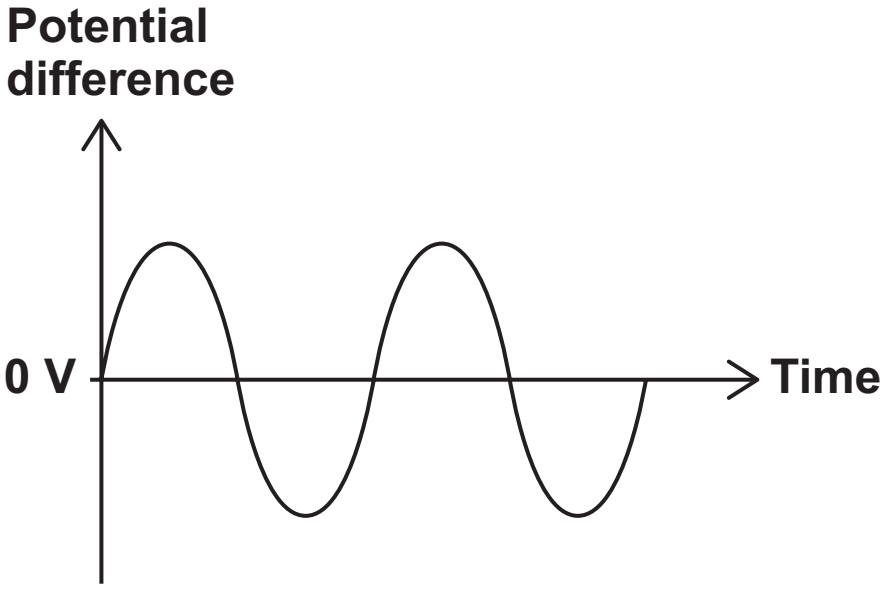

0 4 . 1

How does FIGURE 7 show that the potential difference is alternating? [1 mark]

_____

_____

_____

_____

0 4 . 2

What is the potential difference of the mains electricity supply in the UK? [1 mark]

Mains potential difference = _____ V

0 4 . 3

What is the frequency of the mains electricity supply in the UK? [1 mark]

Mains frequency = _____ Hz

[Turn over]

FIGURE 8 shows a student using hair straighteners.

The hair straighteners contain heating elements which transfer thermal energy to the hair.

FIGURE 8

The hair straighteners are connected to the mains electricity supply by a three-core cable.

0 4 . 4

What is the function of the earth wire in the three-core cable? [1 mark]

Tick (✓) ONE box.

- [ ] **To carry the alternating potential difference from the supply**
- [ ] **To complete the circuit**
- [ ] **To stop the appliance becoming live**

[Turn over]

FIGURE 9 shows the circuit diagram for the hair straighteners.

FIGURE 9

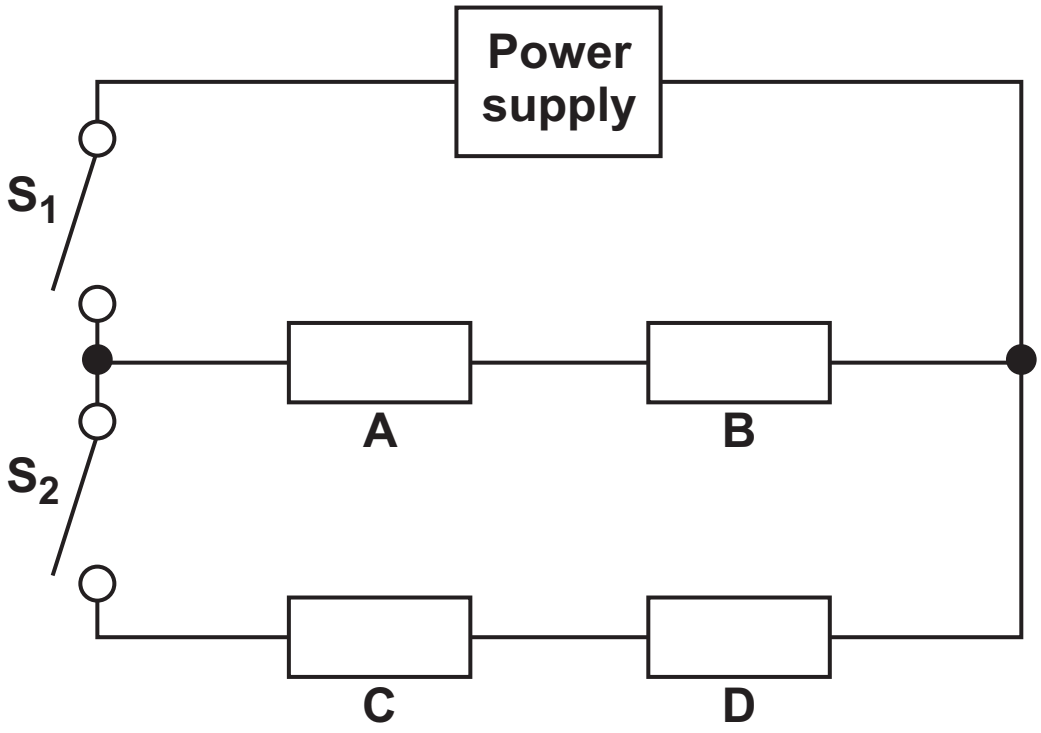

The resistors A, B, C and D represent four identical heating elements in the hair straighteners.

The hair straighteners have two power settings.

0 4 . 5

Describe how using S_1 and S_2 controls the power output of the hair straighteners. [3 marks]

[Turn over]

0 4 . 6

When the hair straighteners are switched off, the heating elements cool down to room temperature.

The energy transferred to the surroundings is 14.4 kJ.

The mean power transfer to the surroundings is 12 W.

Calculate the time taken for the heating elements to reach room temperature.

Use the Physics Equations Sheet. [4 marks]

_____

_____

_____

_____

_____

_____

_____

_____

_____

Time = _____ **s**

11

BLANK PAGE

[Turn over]

0 5

This question is about hydrocarbons.

Methane is a hydrocarbon with the formula CH_4

0 5 . 1

FIGURE 10 shows part of the dot and cross diagram that represents a methane molecule.

FIGURE 10

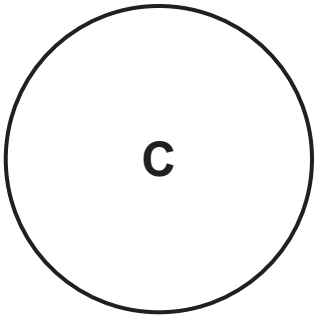

Complete the dot and cross diagram for the methane molecule. [1 mark]

0 5 . 2

Give TWO limitations of using a dot and cross diagram to represent a methane molecule. [2 marks]

1 _____

_____

_____

2 _____

_____

_____

[Turn over]

Crude oil is a mixture of compounds.

Most of the compounds in crude oil are hydrocarbons.

The hydrocarbons can be separated into fractions by fractional distillation.

FIGURE 11 shows a fractional distillation column.

FIGURE 11

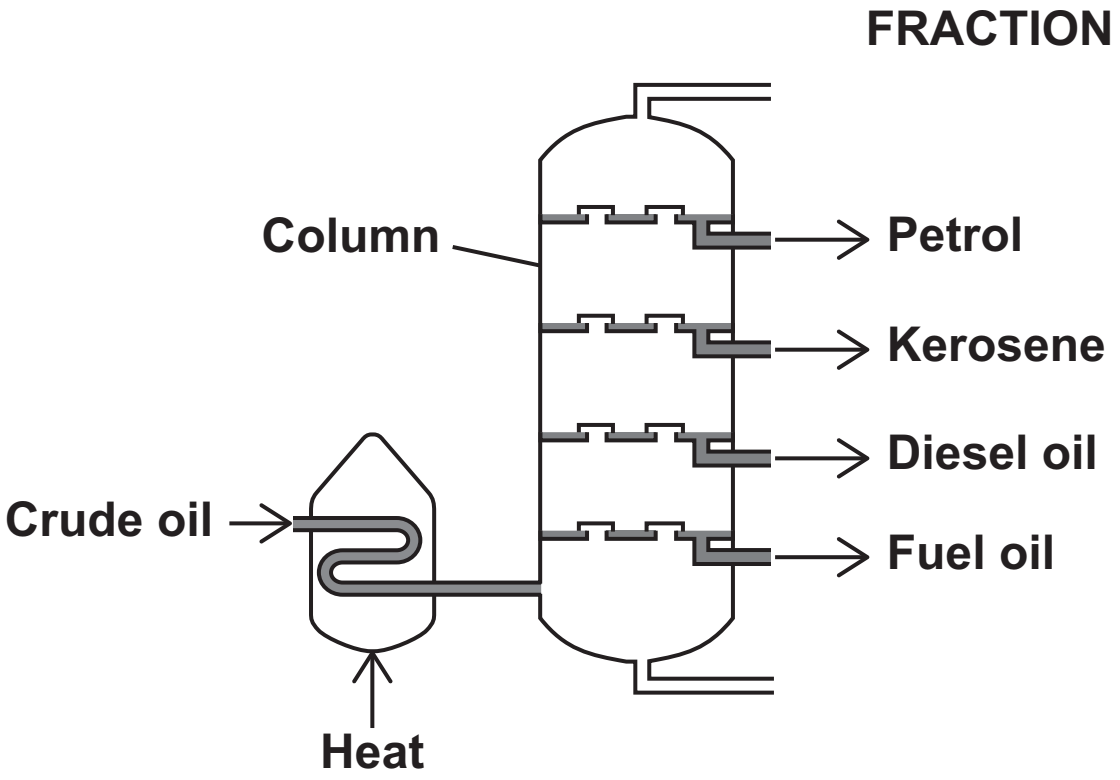

0 5 . 3

Explain how the hydrocarbons in crude oil are separated into fractions by fractional distillation. [4 marks]

[Turn over]

0 5 . 4

Explain how the size of the molecules in kerosene and fuel oil affects their:

- **relative viscosity**
- **relative flammability.**

Use FIGURE 11, on page 32. [2 marks]

0 5 . 5

$C_{10}H_{22}$ is a hydrocarbon in the kerosene fraction.

How does the formula show that $C_{10}H_{22}$ is an alkane?
[1 mark]

_____

_____

_____

[Turn over]

0 5 . 6

98 g of a hydrocarbon contains 84 g of carbon.

The relative formula mass (M_r) of the hydrocarbon is 28.

Relative atomic masses (A_r): C = 12 H = 1

Determine the formula of the hydrocarbon molecule.

You should determine:

- **the simplest whole number mole ratio of carbon : hydrogen**
- **the empirical formula**
- **the formula of the hydrocarbon molecule. [6 marks]**

_____

_____

_____

_____

_____

_____

_____

Simplest whole number mole ratio of

carbon : hydrogen = _____ : _____

Empirical formula = _____

Formula of the hydrocarbon molecule =

_____

16

[Turn over]

0 6

This question is about acids, alkalis and salts.

0 6 . 1

A solution of sodium hydroxide has a concentration of 7.24 g/dm^3.

Calculate the mass of sodium hydroxide needed to make 0.25 dm^3 of the solution. [2 marks]

_____

_____

_____

_____

_____

Mass = _____ **g**

0 6 . 2

Aluminium sulfate is a salt made of Al^{3+} ions and SO_4^{2-} ions.

What is the formula of aluminium sulfate? [1 mark]

Tick (✓) ONE box.

- [ ] Al_2SO_4
- [ ] $Al_2(SO_4)_3$
- [ ] Al_3SO_4
- [ ] $Al_3(SO_4)_2$

[Turn over]

0 6 . 3

What is meant by a 'weak acid'? [1 mark]

0 6 . 4

Name ONE weak acid. [1 mark]

0 6 . 5

The pH value of a solution decreases by one.

How does the hydrogen ion concentration of this solution change? [1 mark]

Tick (✓) ONE box.

- [ ] **Decreases by a factor of 10**
- [ ] **Decreases by a factor of 100**
- [ ] **Increases by a factor of 10**
- [ ] **Increases by a factor of 100**

0 6 . 6

Sodium hydroxide reacts with sulfuric acid to produce sodium sulfate (Na_2SO_4) and water.

Write a balanced equation for this reaction. [2 marks]

_____ + _____ ⟶

_____ + _____

8

0 7

FIGURE 12 shows people going on a journey in a car.

FIGURE 12

0 7 . 1

The distance the car travels is not the same as the displacement of the car from the start position.

Explain why. [2 marks]

[Turn over]

0 7 . 2

Explain how wearing a seatbelt reduces the risk of injury if the car stops suddenly.

Include a reference to Newton's first law in your answer.
[3 marks]

0 7 . 3

Airbags are a safety feature that are fitted to most cars.

FIGURE 13 shows a crash test dummy being used to test the safety of a car.

FIGURE 13

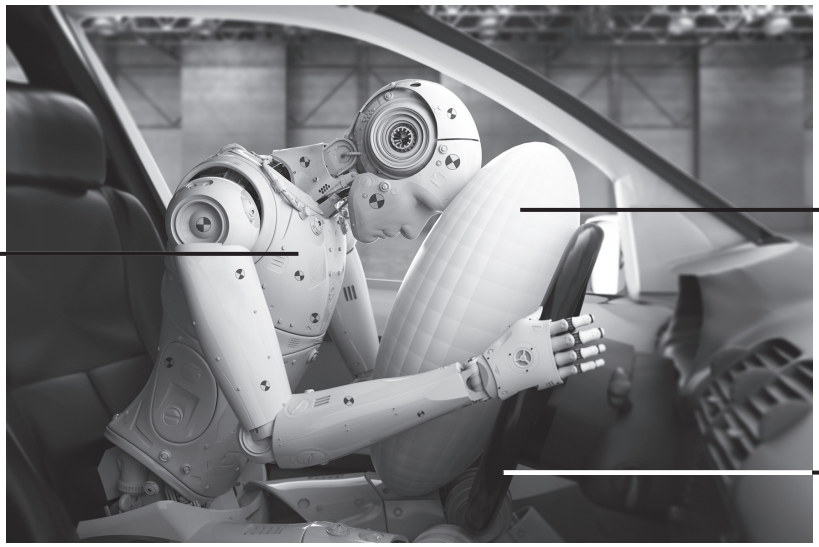

Two crash test dummies are travelling in a car which stops suddenly.

Both dummies continue to move forward when the car stops.

- **Dummy A: collides with an airbag and stops.**
- **Dummy B: collides with the steering wheel and stops.**

[Turn over]

TABLE 1 shows the time taken for the two dummies to stop moving.

TABLE 1

DUMMY	TIME TAKEN FOR DUMMY TO STOP IN SECONDS
A: collides with an airbag	0.120
B: collides with the steering wheel	0.040

Explain how the deceleration of dummy A compares with the deceleration of dummy B. [3 marks]

8

[Turn over]

0 8

This question is about a reversible reaction.

Ethene reacts with steam to produce ethanol.

The equation for the reaction is:

$$C_2H_4(g) + H_2O(g) \rightleftharpoons C_2H_5OH(g)$$

FIGURE 14 shows the percentage yield of ethanol using different reaction conditions.

FIGURE 14

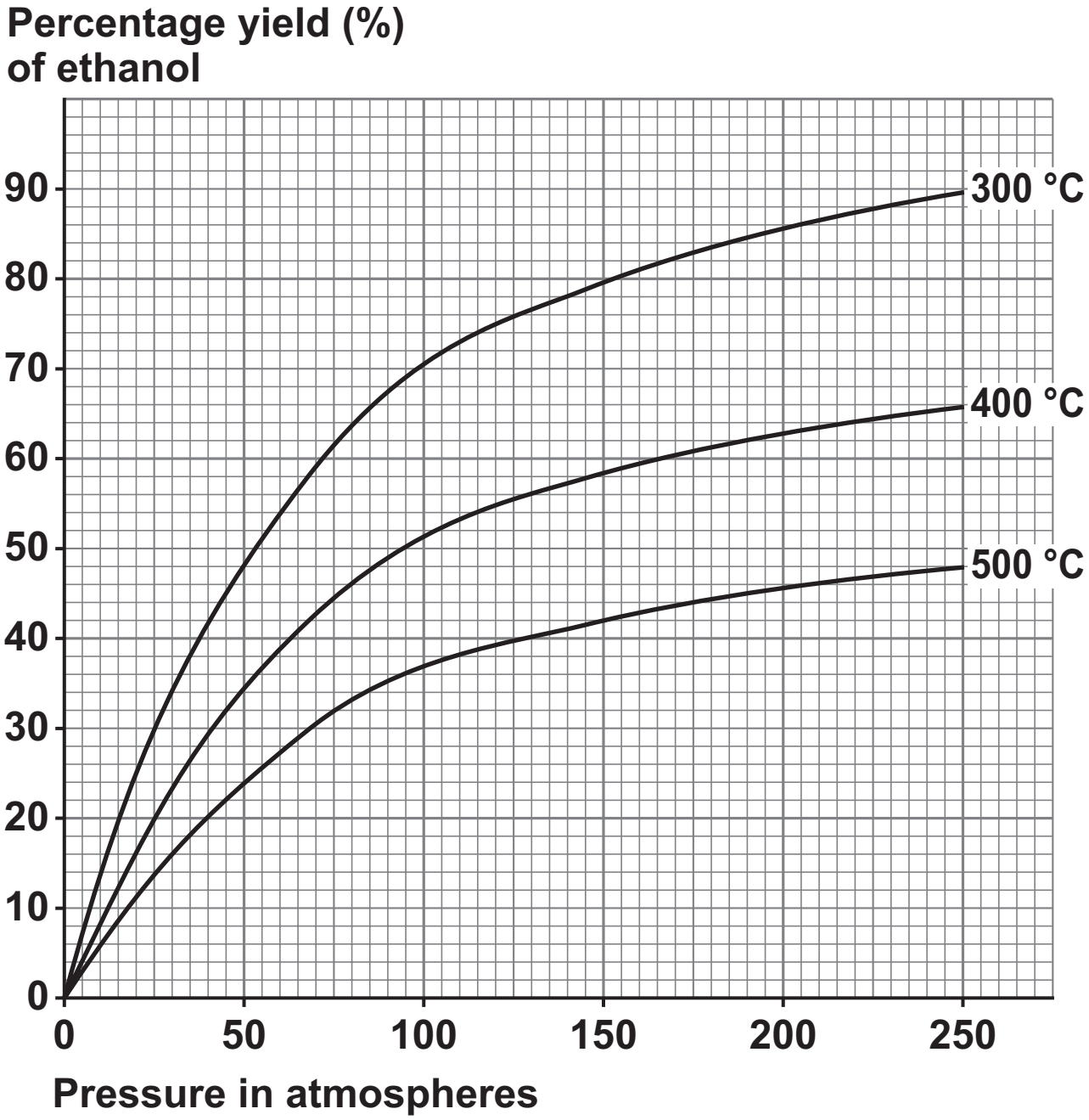

[Turn over]

0 8 . 1

Predict the percentage yield of ethanol at a pressure of 100 atmospheres and a temperature of 350 ºC.

Use FIGURE 14, on page 49. [1 mark]

Percentage yield = _____ %

0 8 . 2

Explain why changing the temperature affects the percentage yield of ethanol.

Use FIGURE 14. [3 marks]

_____

_____

_____

_____

_____

_____

_____

_____

_____

0 8 . 3

How must the apparatus for the reaction be designed so that equilibrium can be reached? [1 mark]

_____

_____

_____

A catalyst is used to increase the rate of the reaction.

0 8 . 4

Define the term 'catalyst'. [1 mark]

_____

_____

_____

[Turn over]

0 8 . 5

What is the effect of the catalyst on the percentage yield of ethanol at equilibrium?

Give ONE reason for your answer. [2 marks]

Effect _____

_____

_____

Reason _____

_____

_____

8

BLANK PAGE

[Turn over]

0 9

This question is about electrolysis.

An aqueous solution of copper sulfate was electrolysed.

0 9 . 1

0.0400 moles of copper were deposited at the negative electrode.

Calculate the number of copper atoms in 0.0400 moles of copper.

Give your answer to 3 significant figures.

Avogadro constant = 6.02×10^{23} per mole [3 marks]

Number of copper atoms (3 significant figures) =

[Turn over]

An aqueous solution of sodium chloride is electrolysed.

Chlorine is produced at the positive electrode.

Hydrogen is produced at the negative electrode.

0 9 . 2

Write a half equation for the reaction at the positive electrode. [2 marks]

_____ → _____

+ _____

0 9 . 3

Explain how hydrogen gas is produced at the negative electrode. [4 marks]

_____

_____

_____

_____

_____

_____

_____

9

[Turn over]

1 0

FIGURE 15 shows a wire held in place between the poles of a permanent magnet.

The wire is connected to an electrical circuit.

FIGURE 15

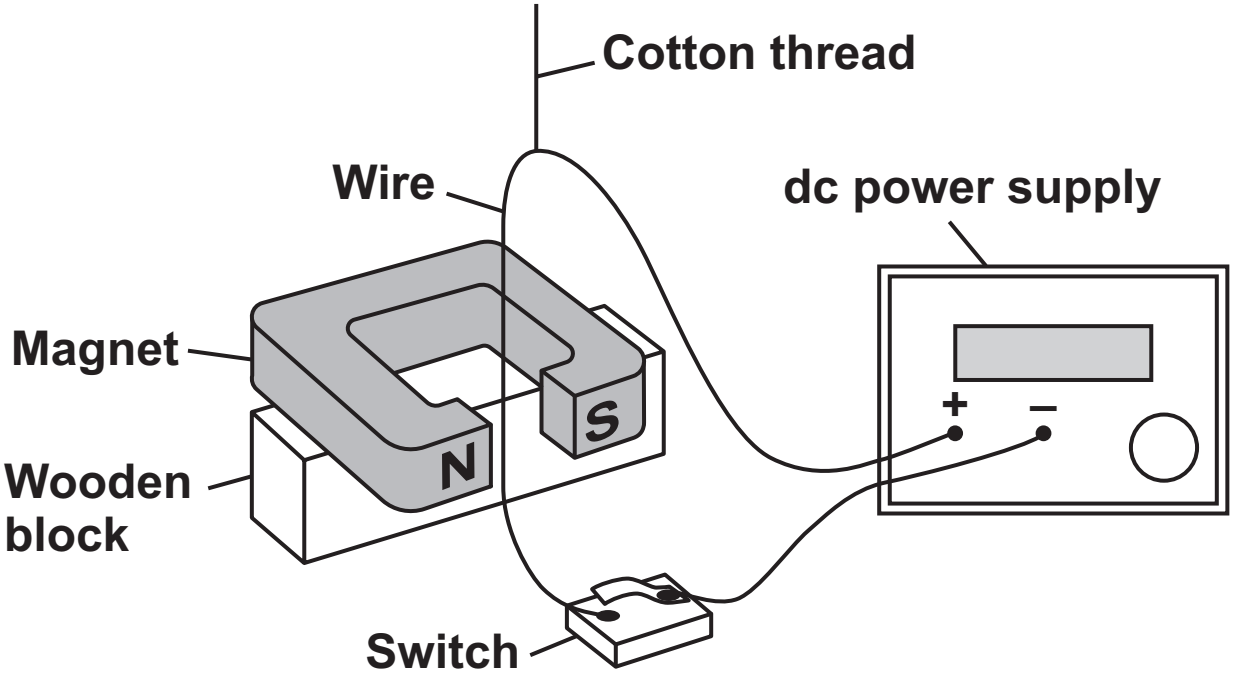

1 0 . 1

When the switch is closed, the wire moves.

Explain why. [4 marks]

[Turn over]

1 0 . 2

The length of wire in the magnetic field around the permanent magnet is 0.050 m.

The potential difference across the ends of the wire is 0.14 V.

The resistance of the wire is 0.040 Ω.

The magnetic flux density of the magnetic field around the permanent magnet is 22 mT.

Calculate the force on the wire.

Use the Physics Equations Sheet. [6 marks]

_____

_____

_____

_____

_____

_____

Force = _____ **N**

10

END OF QUESTIONS

Additional page, if required.
Write the question numbers in the left-hand margin.

Additional page, if required.
Write the question numbers in the left-hand margin.

BLANK PAGE

For Examiner's Use	
Question	Mark
1	
2	
3	
4	
5	
6	
7	
8	
9	
10	
TOTAL	

Copyright information

For confidentiality purposes, all acknowledgements of third-party copyright material are published in a separate booklet. This booklet is published after each live examination series and is available for free download from www.aqa.org.uk.

Permission to reproduce all copyright material has been applied for. In some cases, efforts to contact copyright-holders may have been unsuccessful and AQA will be happy to rectify any omissions of acknowledgements. If you have any queries please contact the Copyright Team.

Copyright © 2023 AQA and its licensors. All rights reserved.